SHARP

SPEC No.	ED-03G045E

ISSUE : January 22 , 2020

TO ;

REFERENCE

S P E C I F I C A T I O N S

Product Name PHOTOINTERRUPTER

Model No. GP2S60 series

These specifications contain 16 pages including the cover and appendix.
This specification sheets and attached sheets shall be both side copy.
After confirmation of the contents, please be sure to send back ___ copy of the Specifications with approving signature on each.
If you have any objections, please contact us before issuing purchasing order.

Accepted by:

By:
Name:
Title:
Date:

By:
Name:
Title:
Date:

Sharp Corporation

By:
Name: T. Kamiyoshi
Title: Senior Manager
Electronic Components and Devices Account Div.
Date:

Sharp Fukuyama Semiconductor Co., Ltd.

By:
Name: T. Hiramatsu
Title: Division Manager
Sensor Development Div. II
Semiconductor Business Unit
Date: Jan 28, 2020

Reviewed by:
By:
Name: K. Iwamoto
Title: Senior Manager
Date: Jan, 28, 2020

Prepared by:
By:
Name: A. Fujita
Title: Supervisor
Date: Jan. 28. 2020

SHARP

REFERENCE

1. These specification sheets include materials protected under copyright of Sharp Corporation ("Sharp").
Please handle with great cares and do not reproduce or cause anyone to reproduce them without Sharp's consent.

2. When using this Sharp product, please observe the absolute maximum ratings, other conditions and instructions for use described in the specification sheets, as well as the precautions mentioned below.
Sharp assumes no responsibility for any damages resulting from use of the product which does not comply with absolute maximum ratings, other conditions and instructions for use included in the specification sheets, and the precautions mentioned below.

(Precautions)

(1) In making catalogue or instruction manual based on the specification sheets, please verify the validity of the catalogue or instruction manuals after assembling Sharp products in customer's products at the responsibility of customer.

(2) This Sharp product is designed for use in the following application areas ;
• Computers • OA equipment • Telecommunication equipment (Terminal) • Measuring equipment
• Tooling machines • Audio visual equipment • Home appliances
If the use of the Sharp product in the above application areas is for equipment listed in paragraphs (3) or (4), please be sure to observe the precautions given in those respective paragraphs.

(3) Appropriate measures, such as fail-safe design and redundant design considering the safety design of the overall system and equipment, should be taken to ensure reliability and safety when Sharp product is used for equipment in responsibility of customer which demands high reliability and safety in function and precision, such as ;
• Transportation control and safety equipment (aircraft, train, automobile etc.)
• Traffic signals • Gas leakage sensor breakers • Rescue and security equipment
• Other safety equipment

(4)Sharp product is designed for consumer goods and controlled as consumer goods in production and quality.
Please do not use this product for equipment which require extremely high reliability and safety in function and precision, such as ;
• Space equipment • Telecommunication equipment (for trunk lines)
• Nuclear power control equipment • Medical equipment

(5) Please contact and consult with a Sharp sales representative if there are any question regarding interpretation of the above four paragraphs.

3. Disclaimer
The warranty period for Sharp product is one (1) year after shipment.
During the period, if there are any products problem, Sharp will repair (if applicable), replace or refund.
Except the above, both parties will discuss to cope with the problems.

The failed Sharp product after the above one (1) year period will be coped with by Sharp, provided that both parties shall discuss and determine on sharing responsibility based on the analysis results thereof subject to the above scope of warranty.

The warranty described herein is only for Sharp product itself which are purchased by or delivered to customer.
Damages arising from Sharp product malfunction or failure shall be excepted.

Sharp will not be responsible for the Sharp product due to the malfunction or failures thereof which are caused by:
(1) storage keep trouble during the inventory in the marketing channel.
(2) intentional act, negligence or wrong/poor handling.
(3) equipment which Sharp products are connected to or mounted in.
(4) disassembling, reforming or changing Sharp products.
(5) installation problem.
(6) act of God or other disaster (natural disaster, fire, flood, etc.)
(7) external factors (abnormal voltage, abnormal electromagnetic wave, fire, etc.)
(8) special environment (factory, coastal areas, hotspring area, etc.)
(9) phenomenon which cannot be foreseen based on the practical technologies at the time of shipment.
(10) the factors not included in the product specification sheet.

4. Please contact and consult with a Sharp sales representative for any questions about Sharp product.

REFERENCE

1. Application

This specification applies to the outline and characteristics of reflective type photointerrupter, Model No. GP2S60.

2. Outline

Refer to the attached drawing No. CY9710i02.

3. Ratings and characteristics

Refer to the attached sheet, Page 6 to 8.

4. Reliability

Refer to the attached sheet, Page 9.

5. Outgoing inspection

Refer to the attached sheet, Page 10.

6. Supplements

6.1 Parts : Refer to the attached sheet, Page 11.

6.2 Package : Refer to the attached sheet-2-1 to 2-4.

6.3 Device delivery shall be delivered model that has "○" marking in the rank table below.
However, in case of GP2S60 with no rank limitation, the quantity of each rank shall not be prescribed.
Collector current (Ic) rank table

Rank at delivery	Model No.	Ic (μA)	Rank
	GP2S60	40 to 130	AorB
	GP2S60A	40 to 80	A
	GP2S60B	65 to 130	B

Test conditions
V_{CE}=2V
IF=4mA
Ta=25℃

6.4 ODS materials

This product shall not contain the following materials.
Also, the following materials shall not be used in the production process for this product.
Materials for ODS : CFC_S, Halon, Carbon tetrachloride, 1.1.1-Trichloroethane (Methylchloroform)

6.5 Specified brominated flame retardants

Specified brominated flame retardants (PBB and PBDE) are not used in this device at all.

6.6 Compliance with each regulation

6.6.1 This product complies with EU RoHS Directive (2011/65/EU) and Commission Delegated Directive (EU)2015/863

6.6.2 Content of six substances specified in Management Methods for Control of Pollution Caused by Electronic Information Products Regulation (Chinese : 电子信息产品污染控制管理办法).

Marking Styles for the Names and Contents of the Hazardous Substances

Category	Hazardous Substances					
	Lead (Pb)	Mercury (Hg)	Cadmium (Cd)	Hexavalent chromium (Cr^{6+})	Polybrominated biphenyls (PBB)	Polybrominated diphenyl ethers (PBDE)
Photointerrupter	○	○	○	○	○	○

This table is prepared in accordance with the provisions of SJ/T 11364.

○ : Indicates that said hazardous substance contained in all of the homogeneous materials for this part is below the limit requirement of GB/T 26572.

6.7 Product mass : Approx. 0.01g

6.8 Country of origin : China

REFERENCE

7. Notes

1) Circuit design

In circuit designing, make allowance for the degradation of the light emitting diode output that results from long continuous operation. (50% degradation/5 years)

2) Prevention of detection error

To prevent photointerrupter from faulty operation caused by external light, do not set the detecting face to the external light.

3) Distance characteristics

The distance between the photointerrupter and the object to be detected shall be determined the distance by referencing attached graph "Relative collector current vs. distance"..

4) Soldering

(1) Solder reflow

Please do only one soldering at the temperature and the time within the temperature profile in attachment-1.

(2) Soldering by hand

To solder onto lead pins, please solder at 260℃ for 5 seconds or less.

(3) Regarding amount of solder, if there is solder leakage in terminal wiring pattern between PCB and housing main body, the reliability will be deteriorated.

Please check the proper amount of solder in advance not to have solder leakage into terminal wiring pattern between PCB and housing main body.

5) Cleaning

Cleaning shall carry out as the below items to avoid keeping solvent, solder and flux on the device.

(1) Solvent cleaning : Solvent temperature 45℃ or less, Immersion for 3 min or less

(2) Ultrasonic cleaning : Please don't carry out ultrasonic cleaning.

(3) The cleaning shall be carried out with solvent below.

Solvent : Ethyl alcohol , Methyl alcohol , Isopropyl alcohol

6) Wiring on a mounting PCB

To avoid possibility for short, please do not apply pattern wiring on the back side of the device.

7) Resim crack

There is a possibility that the opaque molded resin portion may have a crack by force at mounting etc.

Please use this product after well confirmation of conditions in your production line.

REFERENCE

2. Outline Dimensions (Drawing No. CY9710i02) Scale : 20/1 Unit : 1/1mm

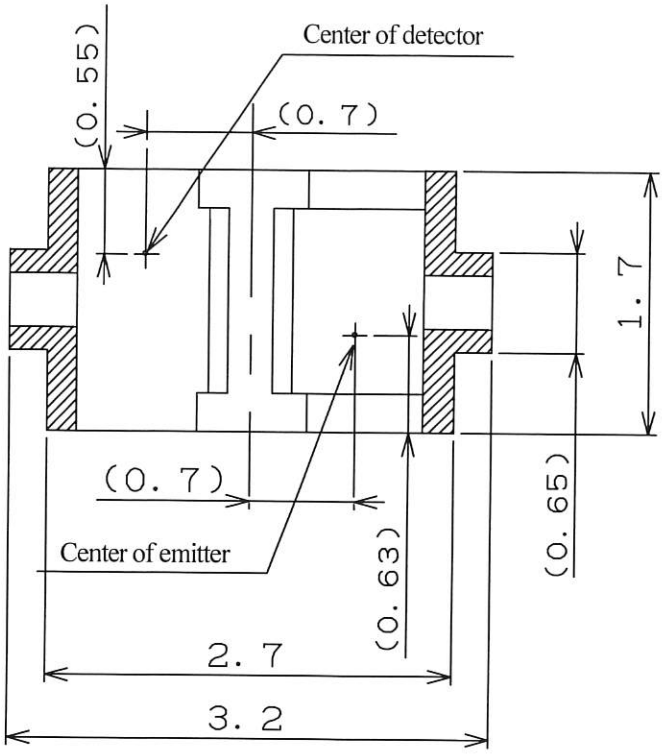

1) Unspecified tolerance shall be ±0.15mm.
2) Dimensions in parenthesis are shown for reference.
3) Dimensions on the outline drawing is the maximum value excluding burr.
The maximum dimension of burr which goes over the area of (3.2×1.7×1.1) shall be ±0.15.
4) ▨ : Au plating area
5) Internal connection diagram is shown below.

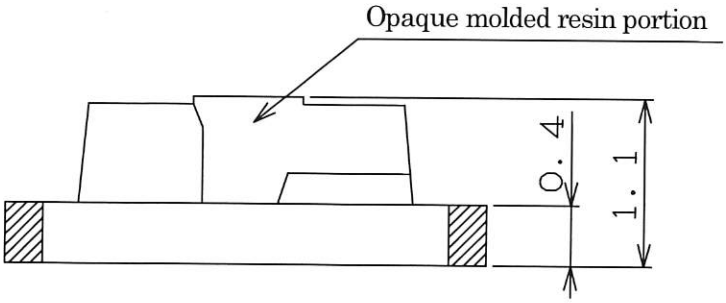

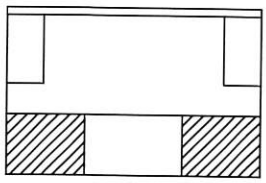

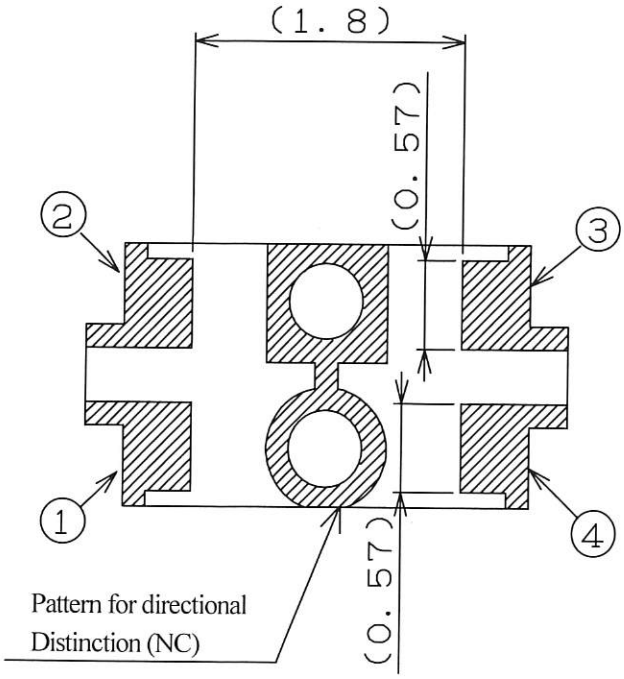

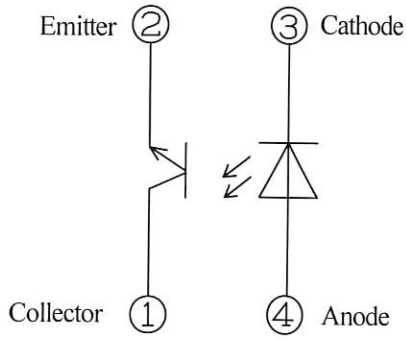

REFERENCE

Recommended pattern drawing Scale : 20/1 Unit : 1/1mm

Note 1) Unspecified tolerances shall be ±0.1.

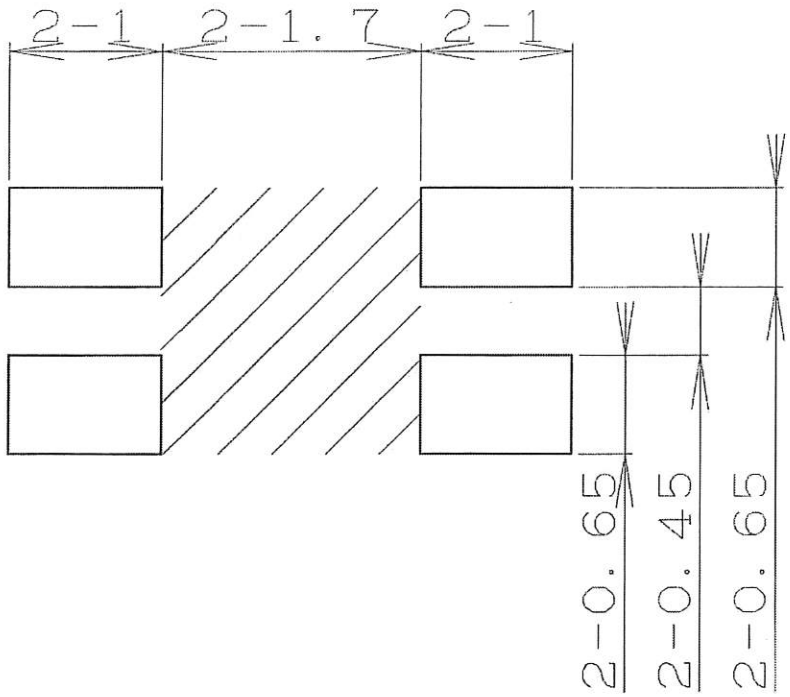

area : To avoid possibility for short, please do not apply pattern wiring

REFERENCE

3. Ratings and characteristics

3.1 Absolute maximum ratings

Ta=25℃

Parameter		Symbol	Rating	Unit
Input	Forward current	I_F	50	mA
	Reverse voltage	V_R	6	V
	Power dissipation	P_D	75	mW
Output	Collector-emitter voltage	V_{CEO}	35	V
	Emitter-collector voltage	V_{ECO}	6	V
	Collector current	Ic	20	mA
	Collector power dissipation	Pc	75	mW
Total power dissipation		Ptot	100	mW
Operating temperature		Topr	-25 to +85	℃
Storage temperature		Tstg	-40 to +100	℃
* Soldering temperature		Tsol	260	℃

* Soldering time : 5 s or less

3.2 Electro-optical characteristics

Ta=25℃

Parameter			Symbol	Conditions	MIN.	TYP.	MAX.	Unit
Input	Forward voltage		V_F	IF=20mA	-	1.2	1.4	V
	Reverse current		I_R	VR=6V	-	-	10	μA
Output	Collector dark current		I_{CEO}	VCE=20V	-	1	100	nA
Transfer characteristics	*1 Collector current		Ic	VCE=2V, IF=4mA	40	85	130	μA
	*2 Leak current		I_{LEAK}	VCE=2V, IF=4mA	-	-	500	nA
	*3 Response time	(Rise)	tr	VCE=2V, Ic=100μA RL=1kΩ, d=1mm	-	20	100	μs
		(Fall)	tf		-	20	100	μs

*1 The conditions and arrangement of the reflective object are shown below.

*2 Without reflective object

*3 d : Glass thickness of reflective mirror

Rank	Collector current Ic (μA)
-	40 to 130
A	40 to 80
B	65 to 130

(Test circuit for response time)

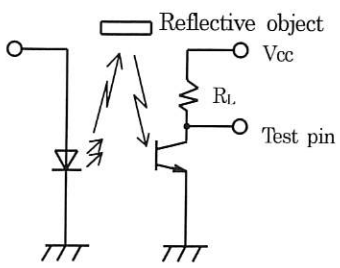

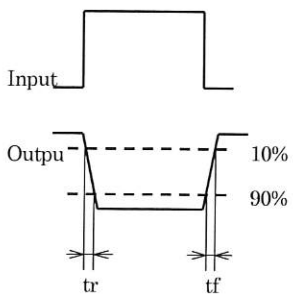

(Test arrangement for collector current)

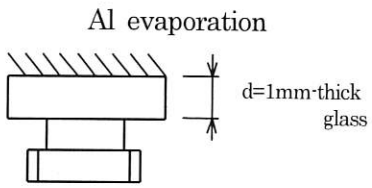

REFERENCE

Power dissipation vs. ambient temperature

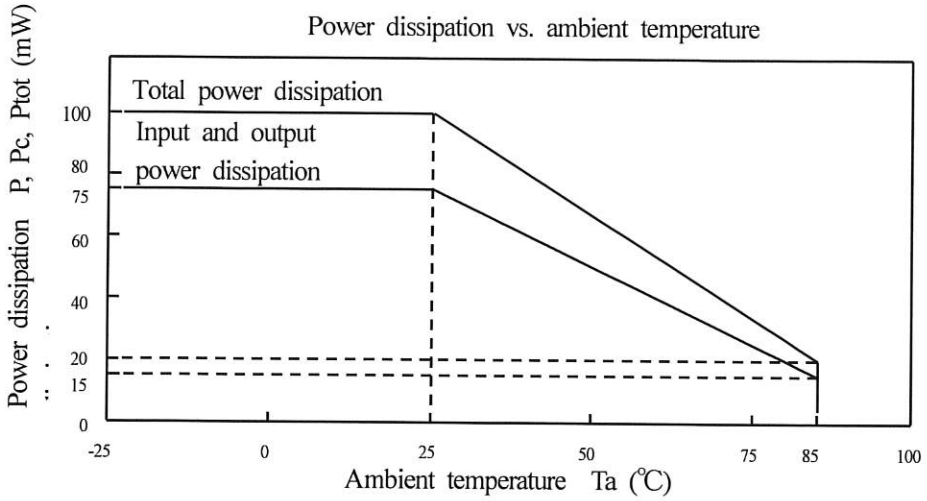

Relative collector current vs. distance (Reference value)

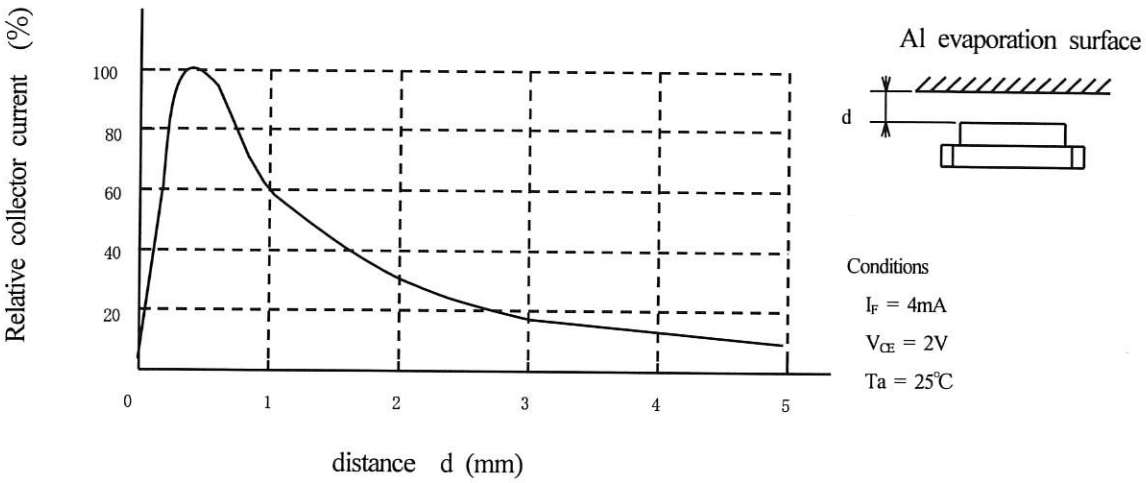

REFERENCE

4. Reliability

The reliability of products shall satisfy items listed below.

Confidence level : 90%
LTPD : 10 or 20

Test Items	Test Conditions	Failure Judgement Criteria	Samples (n) Defective (c)
Temperature cycling	1 cycle -40℃ to +100℃ (30min) (30min) 20 cycles test	VF≧U×1.2 Ic≦L×0.8 I_{LEAK}≧U×2 I_R≧U×2 I_{CEO}≧U×2 U: Upper specification limit L: Lower specification limit	n=22, c=0
humidity storage	+60℃, 90%RH, 500h		n=22, c=0
High temp. storage	+100℃, 500h		n=22, c=0
Low temp. storage	−40℃, 500h		n=22, c=0
Operation life	IF=50mA, Ta=25℃ Ptot=100mW, 500h		n=22, c=0
Mechanical shock	15000m/s^2, 0.5ms 3 times/±X, ±Y, ±Z direction		n=11, c=0
Variable frequency vibration	100 to 2000 to 100Hz/20min 100m/s^2, 2h/X, Y, Z direction		n=11, c=0
Solder reflow	Refer to the attachment-1. 1 time	Ic＜L×0.8	n=22, c=0

REFERENCE

5. Outgoing inspection

5.1 Inspection items

(1) Electrical characteristics

V_F, I_R, BV_{ECO}, BV_{CEO}, I_C, I_{CEO}

(2) Appearance

5.2 Sampling method and Inspection level

A single sampling plan, normal inspection level II based on ISO 2859 is applied.
The AQL according to the inspection items are shown below.

Defect	Inspection item	Inspection level	AQL (%)
Major defect	Characteristics defect	Normal inspection II	0.065
Minor defect	Defects on appearance except shown above. *	Normal inspection II	0.25

※ Crack … Visible crack shall be defect.
Split
Chip
Scratch
The others
… One which affects the electrical characteristics shall be defect.

REFERENCE

6. Supplements

6.1 Parts

This product uses the below parts.

6.1.1 Light detector (Quantity : 1)

Type	Material	Maximum sensitivity (nm)	Sensitivity (nm)	Response time (μs)
Phototransistor	Silicon (Si)	930	700 to 1200	20

6.1.2 Light emitter (Quantity : 1)

Type	Material	Maximum light emitting wavelength (nm)	I/O Frequency (MHz)
Infrared light emitting diode (non-coherent)	GaAs	950	0.3

6.1.3 Material

Case	PCB	Lead frame plating
Epoxy resin Black epoxy resin	Grass epoxy resin	Au plating

6.1.4 Others

This product shall not be proof against radiation flux.

REFERENCE

(Attachment-1)

Precautions for Soldering photointerrupter

1. In case, solder reflow

Please do only one soldering at the temperature and the time within the temperature profile as shown in the figure below.

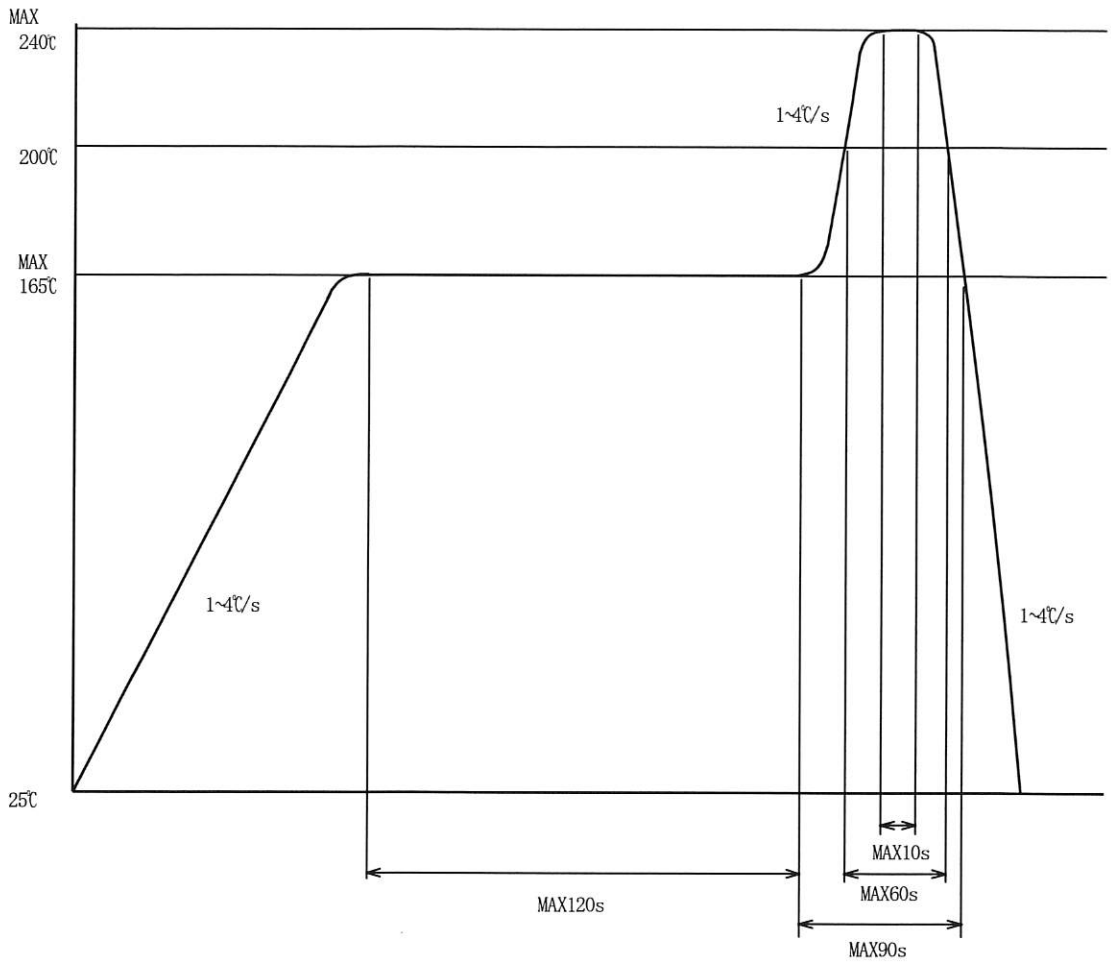

2. Other precautions

An infrared lamp used to heat up for soldering may cause a localized temperature rise in the resin.
So keep the package temperature within that specified in Item 1.
Also avoid immersing the resin part in the solder.
Even if within the temperature profile above, there is the possibility that the
gold wire in package is broken in case that the deformation of PCB gives the affection to lead pins.
Please use after confirmation the conditions fully by actual solder reflow machine.

REFERENCE

(Attachment-2-1)

Package specifications (ϕ 180mm reel)

1. Application

This specification applies to the taping specifications and the relation items for the GP2S60.

2. Taping method

(2.1) Tape structure and Dimensions (Refer to the attached sheets-2-2)

The tape shall have a structure in which a cover tape is sealed heat-pressed on the carrier tape made by PS to protect against static electricity.

(2.2) Reel structure and Dimensions (PS-material) (Refer to the attached sheets-2-3)

(2.3) Direction of product insertion (Refer to the attached sheets-2-3)

Product direction in carrier tape shall direct to the emitting diode at the hole side on the tape.

3. Method of incomplete seal

In case of repair taped failure devices, cut a surface of cover tape at three side of square hole on carrier tape by cutter, and after replacing to good devices, the cut portion shall be sealed with adhesive tape.

4. Adhesiveness of cover tape

The exfoliation force between carrier tape and cover tape shall be 0.2N to 1.0N for the angle from 160° to 180°.

5. Rolling method and quantity

Wind the tape back on the reel so that the cover tape will be outside the tape.

Attach more than 25cm of blank tape to the trailer and the leader of the tape and fix the both ends with adhesive tape.

One reel shall contain 2000 pcs.

6. Indication items

The contents of the carton indication conforms to EIAJ C-3 and the following items are indicated.

Model No., Internal production control name, Quantity, Packing date, Corporate name, Country of origin

7. Safety protection during shipping

There shall be no deformation of component or degradation of electrical characteristics due to shipping.

REFERENCE

(Attachment-2-2)

Tape structure and Dimensions

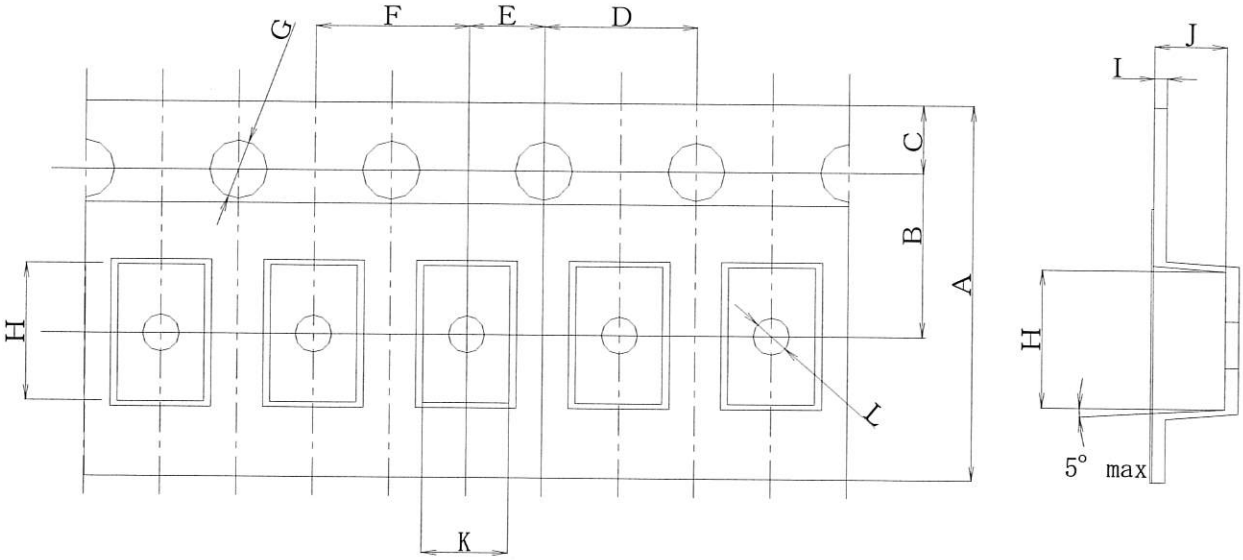

Symbol / Unit	A	B	C	D	E	F
mm	±0.3 8.0	±0.05 3.5	±0.1 1.75	±0.1 4.0	±0.1 2.0	±0.1 4.0

Symbol / Unit	G	H	I	J	K	L
mm	±0.05 φ 1.55	±0.1 3.6	±0.05 0.3	±0.1 1.25	±0.1 2.2	±0.1 φ 1.1

REFERENCE

(Attachment-2-3)

Reel structure and Dimensions

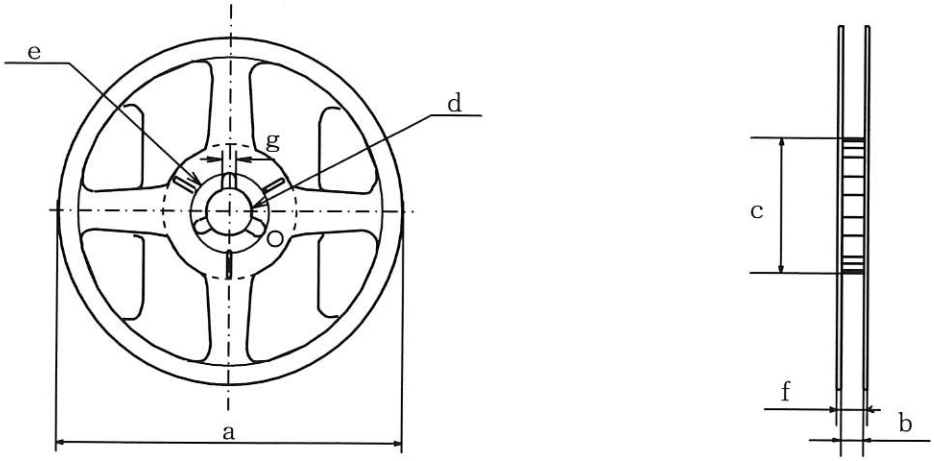

Symbol / Unit	Check word						
	a	b	c	d	e	f	g
mm	180±2.0	9±1.0	$\phi 60^{+0.5}_{-0}$	$\phi 13 \pm 0.2$	$\phi 21 \pm 0.8$	11.4±1.0	$2^{+0.3}_{-0}$

Direction of product insetion

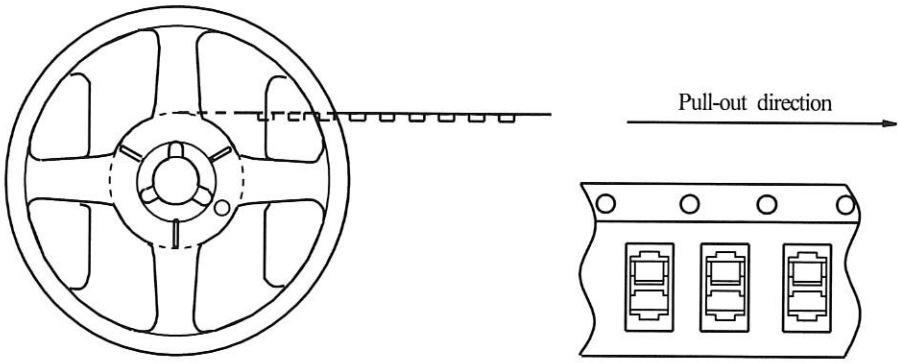

REFERENCE

(Attachment-2-4)

Moisture-proof package specification (ϕ 180mm reel)

1. Application

This specification applies to the products which Sharp delivers to customer.

2. Packaging specifications

2.1 Packaging material

Name	Material	Quantity	Aim
Aluminum laminated sack	Aluminum polyethylene	Refer to 2.2	Moisture-proof
Label	Paper(-made)	-	Indication of Model No. and Quantity

2.2 Packaging method

(1) Seal the aluminum laminated bag included the ruled tape-reel quantity.

(2) Fill up the blank of label and paste on the bag.

(3) Put the moisture-proof laminated bag in the ruled case (5 bag/case).

Package shape	Product	Quantity	Moisture-proof sack Quantity
Tape-reel (ϕ 180mm)	1ch. type	2000pcs./reel	1reel/bag

Minimum order Quantity : 1 reel/bag

2.3 Regular packing mass

(Excluding fractions, however above packing material, packing count, packing style)

Product mass : Approx. 790g

3. Storage and management after open

3.1 Storage condition : Storage shall be in accordance with the below conditions.

Storage temp. : 5 to 30℃

Storage humidity : 70%RH or less

3.2 Treatment after open

(1) After open, please mount at the conditions of humidity 60%RH or less and temperature 5 to 25℃ within 2 days.

(2) In case of long time storage after open, please mount at the conditions of humidity 70%RH or less and temperature 5 to 30℃ within 2 weeks by using dry box or resealing with desiccant in moisture-proof bag by sealer.

3.3 Baking before mounting

In case that it could not carry out the above treatment, it is able to mount by baking treatment.
However baking treatment shall be limited only 1 time.

Recommended conditions : 125℃, 16 to 24 hours

※ Baking treatment can not carry out at the packaged condition. Please carry out baking at the condition of mounting on PCB or getting on the metal tray.